Raspberry Pi Compute Module 4
Antenna Kit

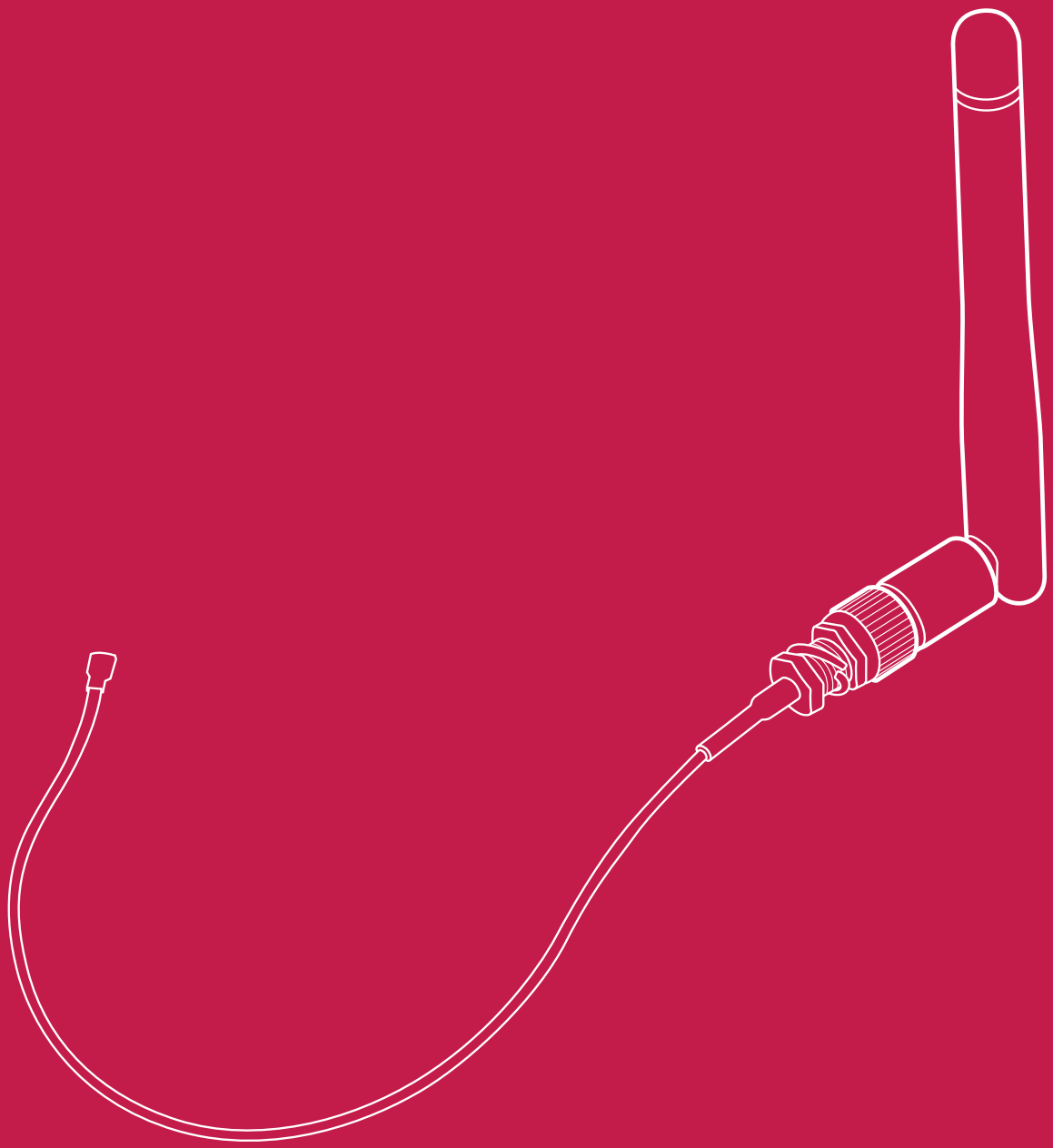

Distribuída no Brasil pela LRI | vendas@lri.com.br | 51 2129-3000

Published in October 2020
by Raspberry Pi Trading Ltd.

www.raspberrypi.org

Raspberry Pi

Overview



This Antenna Kit is certified for use with the Raspberry Pi Compute Module 4. If a different antenna is used, then separate certification will be required, and this must be arranged by the end-product design engineer.

Specification: antenna

Model number:	YH2400-5800-SMA-108
Frequency range:	2400-2500/5100-5800 MHz
Bandwidth:	100–700MHz
VSWR:	≤ 2.0
Gain:	2 dBi
Impedance:	50 ohm
Polarisation:	Vertical
Radiation:	Omnidirectional
Maximum power:	10W
Connector:	SMA (female)

LRI Distribuída no Brasil pela LRI | vendas@lri.com.br | 51 2129-3000

Dimensions:	108 mm × 10 mm
Shell material:	ABS
Installation:	Screw
Operating temperature:	-35 to +75°C
Weight:	± 3 g

Specification – SMA to U.FL cable

Model number:	HD0052-09-A01_A0897-1101
Frequency range:	0–6GHz
Impedance:	50 ohm
VSWR:	≤ 1.4
Maximum power:	10W
Connector (to antenna):	SMA (male)
Connector (to CM4):	U.FL
Dimensions:	205 mm × 1.37 mm (cable diameter)
Shell material:	ABS
Operating temperature:	-45 to +80°C
Compliance:	For a full list of local and regional product approvals, please visit https://pip.raspberrypi.org

LRI Distribuída no Brasil pela LRI | vendas@lri.com.br | 51 2129-3000

Physical dimensions

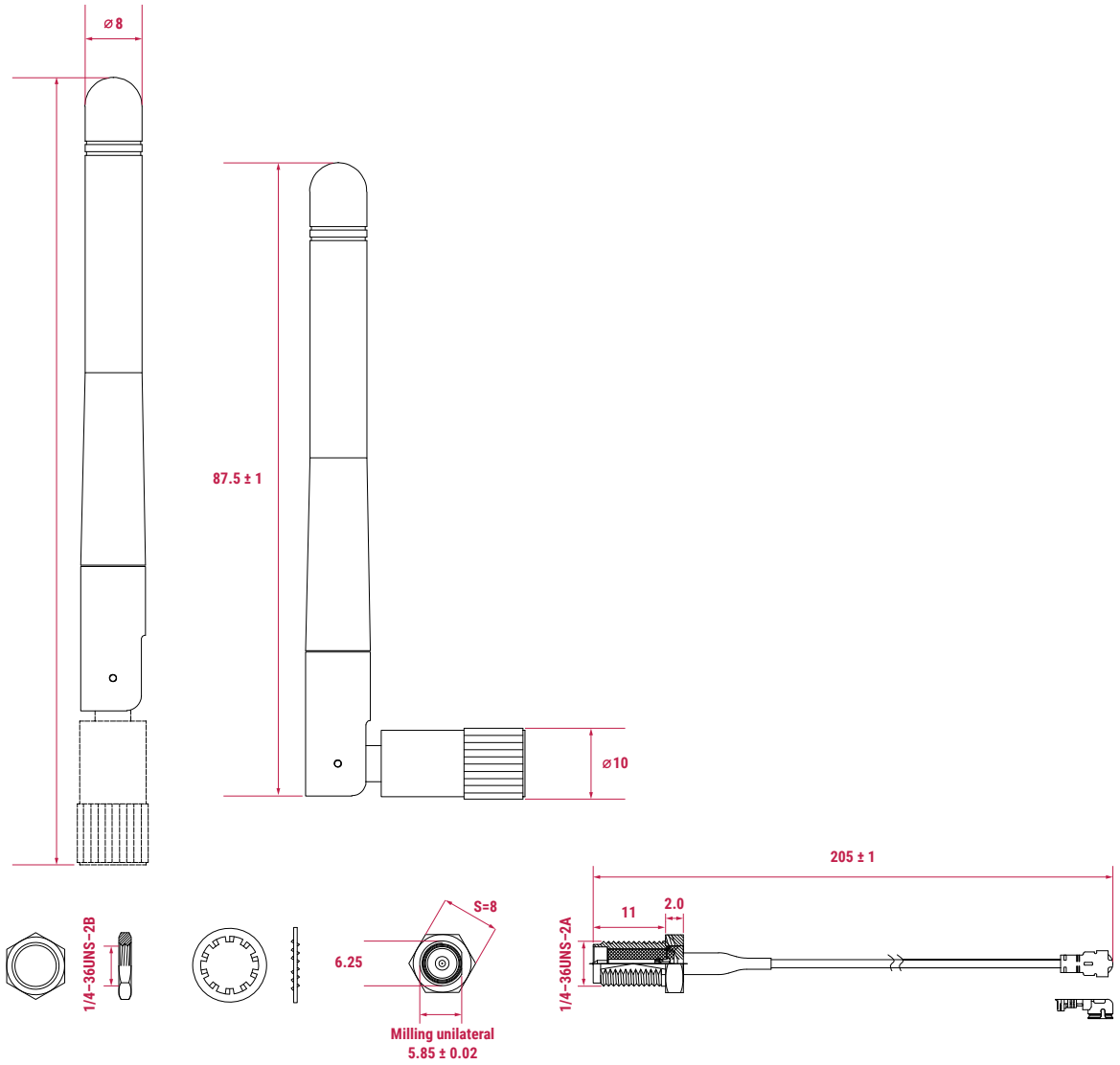

LRI Distribuída no Brasil pela LRI | vendas@lri.com.br | 51 2129-3000

Fitting instructions

1. Connect the U.FL connector on the cable to the U.FL-compatible connector on Compute Module 4
2. Screw the toothed washer onto the SMA (male) connector on the cable, then insert this SMA connector through a hole (e.g. 6.4 mm) in the end-product mounting panel
3. Screw the SMA connector into place with the retaining hexagonal nut and washer
4. Screw the SMA (female) connector on the antenna onto the SMA (male) connector which now protrudes through the mounting panel
5. Adjust the antenna to its final position by turning it through up to 90°, as shown in the illustration below

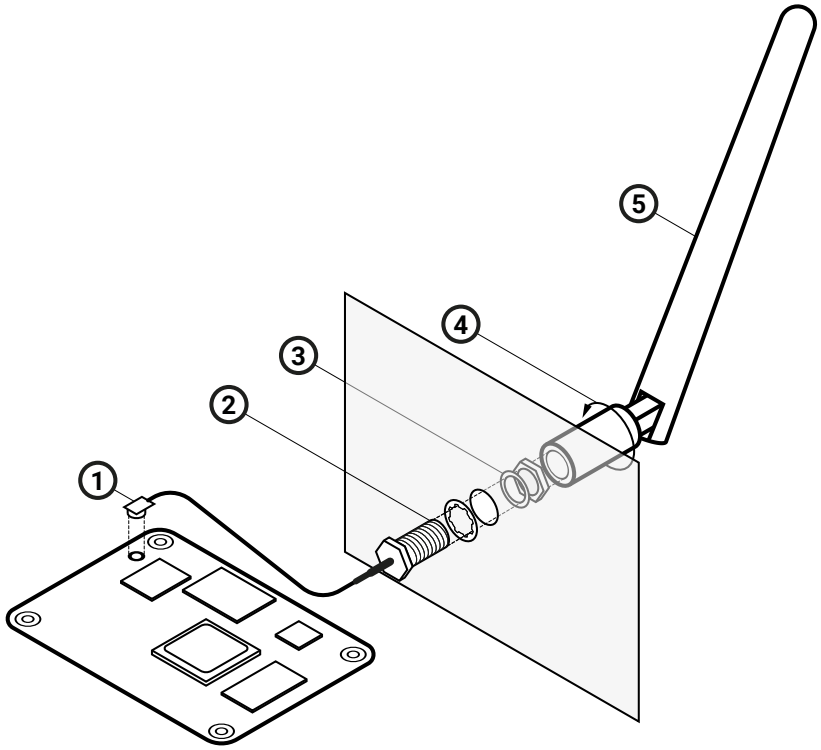

WARNINGS

- This product shall only be connected to a Raspberry Pi Compute Module 4.
- All peripherals used with this product should comply with relevant standards for the country of use and be marked accordingly to ensure that safety and performance requirements are met. These articles include but are not limited to keyboards, monitors and mice when used in conjunction with the Raspberry Pi.

SAFETY INSTRUCTIONS

To avoid malfunction or damage to this product, please observe the following:

- Do not expose to water or moisture, or place on a conductive surface whilst in operation.
- Do not expose it to external heat from any source. The Raspberry Pi Compute Module 4 Antenna Kit is designed for reliable operation at normal ambient room temperatures.
- Take care whilst handling to avoid mechanical or electrical damage to the Compute Module 4, Antenna, and connectors.
- Avoid handling the unit whilst it is powered.

LRI Distribuída no Brasil pela LRI | vendas@lri.com.br | 51 2129-3000


SEC 004
B041
KLMBG2JETD
NK20X020
Raspberry Pi Compute Module 4
Made in the UK

Distribuída no Brasil pela LRI | vendas@lri.com.br | 51 2129-3000

Raspberry Pi and the Raspberry Pi logo are trademarks of the Raspberry Pi Foundation

Raspberry Pi